Memorandum

To: Upper Charles Trail Committee
Town of Hopkinton
18 Main Street
Hopkinton, MA 01748

Date: November 11, 2016

Project #: 13539.00

From: Jack Madden, PE

Re: Phase 3 Upper Charles River Trail
Feasibility Study
Hopkinton, MA

1.1 Project Background

This Feasibility Report includes existing conditions, feasible alternatives, impacts, estimated construction costs, and anticipated permitting actions associated with the design and construction of a Shared Use Path (SUP) connecting the existing the Center School on Ash Street to the eastern border of the Town-owned parcel U17 62 0 in the Town of Hopkinton, MA. Completion of this Feasibility Report is the initial step in moving this project through the Town's funding and procurement process. The purpose of this Feasibility Report is to help inform the Town's decision on whether or not to pursue the further design and construction of this facility.

2.1 Project Area Boundaries

The Project Area consists of Town-owned parcels bounded by the Route 135 to the north, Prestwick Drive and Legacy Farm Road to the east, Hearthstone Road to the south, and Ash Street to the west.

2.2 Project Area General Land Uses

This project proposes to construct an SUP through existing open space on Town-owned parcels that are heavily wooded with existing footpaths and utility corridors. The footpaths are apparently well-used for walking/hiking purposes. The eastern portion of the project area has been identified as "Conservation Land" by the Massachusetts Geographic Information Systems (MassGIS) database.

3.1 Design Policy Related to Bicycle and Pedestrian Accommodation

The US Department of Transportation (USDOT) policy and the Massachusetts Department of Transportation (MassDOT) policy is to incorporate safe and convenient walking and bicycling facilities into transportation projects. The USDOT policy states that every transportation agency, including state DOT's, has the responsibility to improve conditions and opportunities for walking and bicycling and to integrate walking and bicycling into their transportation systems. Because of the numerous individual and community benefits that walking and bicycling provide — including health, safety, environmental, transportation, and quality of life — transportation agencies are encouraged to go beyond minimum standards to provide safe and convenient facilities for these modes.

3.2 Definitions of Bikeway Types

The following types of bikeways were considered during the preparation of this memo. These bikeway definitions are taken from the *AASHTO Guide for the Development of Bicycle Facilities 2012 Fourth Edition.*

1 Cedar Street
Suite 400
Providence, RI 02903-1023
P 401.272.8100

Marked Shared Land

Paved Shoulder

Bike Lane

Shared-Use Path

- **Shared Lane Bikeway** – Shared lane bikeways are best used on minor local neighborhood streets with low speeds and low traffic volumes where bicycles can share the road without special provisions. Generally the speed differential between motorists and bicyclist is typically 15 mph or less and motor vehicle speeds of 30 mph or less. Traffic volumes on the roadway are typically less than approximately 1000 vehicles per day.
- **Marked Shared Lane Bikeway** – Marked shared-lane bikeways are best used on local collectors or minor arterials with narrow travel lanes where bike lanes are not feasible due narrow lanes, space constraints and right-of-way limitations. Traffic volumes can be variable but the motor vehicle speed limit should be 35 mph or less.
- **Paved Shoulder** – Paved shoulders are paved areas adjacent to the roadway travel lanes delineated by a longitudinal pavement marking. Paved shoulder bikeways are best used on rural roadways that connect town centers or other attractions but can be used in urban areas. Traffic volumes can be variable but the motor vehicle posted speed should be in the range of 40-55 mph. The width of the shoulder should be dependent on characteristics of the adjacent motor vehicle traffic (i.e. wider shoulders should be used on higher speed roadways) but a shoulder width of 4 feet is considered the minimum for bicycle travel.
- **Bike Lane** – A bike lane is a portion of a roadway that has been designated for preferential or exclusive use by bicyclists by pavement markings and if used, signs. Bike lanes can be used on major roads to provide quick and direct bicycle access to the same destinations as motorists. Bike lanes can also be used on collector roads or congested urban streets. Generally roadway design speeds are more than 25 mph. Traffic volumes can vary as the motor vehicle/bicycle speed differential is generally a more important factor in the decision to provide bike lanes.
- **Shared-Use Path** – A shared-use path (SUP) is a bikeway outside of the roadway traveled way and physically separated from motorized vehicular traffic by a buffer or barrier. The SUP can be either within the roadway right-of-way or on an independent alignment. SUP's are also used by pedestrians including skaters, wheelchairs users and joggers/walkers. The types of design criteria for SUP's (design speed, minimum curve radii, stopping sight distance, etc.) are of similar type for design of roadways but modified based on the operating characteristics of a bicycle as a vehicle and bicyclist as a vehicle operator.

Rail-with-Trail

Rail-with-Trail – A rail-with-trail is a SUP parallel and adjacent to a railroad.

Rail-to-Trail – A rail-to-trail is a SUP constructed within the remaining bed of a former rail line. Often the rail bed had been constructed by cutting and filling the existing terrain to maintain straight alignment and gentle even grades which is compatible with ADA accessibility requirements.

3.3 Design Criteria

The project criteria has been derived based on standard engineering practice and the successful application of regulatory standards and guidelines. The primary references for the project criteria listed include:

- The American with Disabilities Act (ADA) Design Guidelines for Shared-Use Paths;
- The Massachusetts Department of Transportation *Massachusetts Highway Department Project Development and Design Guide*, 2006.
- The Massachusetts Department of Transportation *Separated Bike Lane Planning and Design Guide*, 2012.
- The American Association of State Highway and Transportation Officials (AASHTO) *2012 Guide for the Development of Bicycle Facilities, 4th Edition*, (AASHTO Bike Guide);
- AASHTO *2011 A Policy on Geometric Design of Highways and Streets* (The AASHTO Green Book); and
- The *Manual on Uniform Traffic Control Devices* (MUTCD) 2009 Edition with revisions and applicable Interim Approvals.
- Related DOT Engineering Directives.

4.1 Design Criteria

The Phase 3 Upper Charles River Trail (Phase 3 UCT) would provide a traffic-separated SUP from the Center School east to the eastern edge of Town-owned parcel U17 62 0 using a combination of existing footpath alignments and undeveloped right of way. The existing terrain within the project limits is rugged with poorly drained areas, exposed tree roots and rocks and variable topography. In order to comply with current Federal Highway Administration (FHWA) guidelines for accessibility in the design of SUP's, existing grades and surfaces would need to be modified to accommodate users with disabilities. The FHWA's *Designing Sidewalks and Trails for Access Part II of II* (2014), which describes best practices for designing sidewalks and trails, recommends that 70% of the grades along an SUP be 5% or less; and that any grade over 5% provide rest areas at regular intervals. In addition, with any grades greater than 6% a 30mph design speed should be used to calculate horizontal curves and stopping sight distance.

Two alternatives for the Phase 3 UCT have been identified along the following alignments (**See Figures 1 and 2 and Typical Sections**):

- **<u>Alternative 1:</u>** From the rear of the Center School, the proposed 12' wide SUP passes south of a playground along the alignment of an existing footpath and a proposed uphill grade of 8% (**Segment 1**). From the top, the path continues downhill along the existing footpath alignment at a proposed grade of 10% with rest intervals every 30 feet through the powerline clearing (**Segment 2**) and existing forest, passing through an existing stone wall boundary. The grade flattens out to 3% and the alignment continues generally in a southerly direction along the existing footpath, where a boardwalk is proposed across an existing seasonal water crossing (**Segment 3**). The terrain along this section of the existing footpath is relatively flat but rocky with exposed ledge features (**Segments 4 and 5**). Some additional rock excavation is anticipated in places in order to construct a suitable pavement structure along the proposed alignment with smooth consistent grades of less than 5% (**Segments 6, 7,and 8**). As the proposed alignment turns to the east it follows a path flagged by the Upper Charles Trail Committee at a proposed downhill grade of 8%. In order to achieve the 8% grade, this segment would require an additional 200LF of length with rest intervals every 200 feet (**Segment 9**). After crossing a cleared gas utility corridor, the alignment resumes along an existing footpath and the terrain becomes more gradual and smooth (**Segment 10**). A short, steep slope will require some fill to reduce a downhill grade of 15% to 10% (**Segment 11**) before the trail heads north along the existing footpath alignment. A 160' boardwalk structure is proposed to cross a wetland before the alignment heads east along a 3% uphill grade to the edge of the property line and the proposed terminous of the SUP (**Segments 12 and 13**).

- **<u>Alternative 2:</u>** From the rear of the Center School, the proposed 12' wide SUP passes south of a playground along the alignment of an existing footpath and a proposed uphill grade of 8% (**Segment 1**). The footpath continues downhill along the existing footpath alignment at a proposed grade of 10% with rest intervals every 30 feet through the powerline clearing (**Segment 2**) where it leaves the existing footpath alignment and heads toward the north through undeveloped forest (**Segment 3**). The proposed alignment generally follows the northern town-owned parcel boundary where an existing 20% downhill grade is reduced to 10% by constructing a switchback alignment by adding an additional 620 feet of length including regular, required rest intervals (**Segment 4**). The proposed alignment would require a cut section (**Segment 5**) to smooth out the excessive downhill vertical grade between two short segments of the alignment resulting in 5% transition to reduce a short 30% downhill grade to 7% (**Segment 6**). The proposed alignment then crosses over an existing footpath before resuming along an alignment flagged by the by the Upper Charles Trail Committee as a desirable path. The proposed SUP continues at a downhill grade of 8% where fill and MSE slopes are used to smooth the existing rugged vertical grades (**Segments 7 and 8**). Continuing along the flagged path, the terrain flattens out to a 5% downhill grade (**Segments 9 and 10**) before resuming along the alignment of an existing footpath which turns toward the south. A 200' boardwalk is proposed through a wetland crossing as the existing alignment intersects with another existing footpath. The proposed alignment turns to the east and resumes along this second existing alignment (**Segment 11**). A short, steep slope will require some fill to reduce a downhill grade of 15% to 10% (**Segment 12**) before the trail heads north along the existing footpath alignment. A 160' boardwalk structure is proposed to cross a wetland before the alignment heads east along a 3% uphill grade to the edge of the property line and the proposed terminous of the SUP (**Segments 13 and 14**).

5.1 General Applicable Environmental Guidance

This Feasibility Report was developed using data provided by the Massachusetts Office of Geographic Information Systems (MassGIS). This database is a compilation of information acquired from a broad base of public and private agencies and serves as a useful tool for the purposes of planning and assessing potential suitability of land use and development. The findings below are useful for identifying stakeholders and anticipating permitting requirements for the proposed alternatives. Further research, field verification and field survey will be needed to verify the findings of this report before proceeding to final design.

5.2 Anticipated Impacts and Criteria

This section describes the anticipated environmental impacts of the three SUP alignments and other criteria for evaluation, including:

- Relocation Impacts and Right of Way Acquisition
- Considerations Relating to Pedestrians and Bicyclists
- Air Quality Impacts
- Noise Impacts
- Impacts to Outstanding Resource Water
- Impacts to Wetlands
- Floodplain Impacts
- Impacts to Certified Vernal Pools
- Impacts to NHESP Priority and Estimated Habitats
- Impacts to Areas of Critical Environmental Concern
- Impacts to National Register Historic District and Property
- MassDEP Approved Wellhead Protection Area(Zone II)
- Impacts to Hazardous Waste Sites
- Construction Impacts
- Visual Impacts
- Impacts to Public Utilities
- Public Facilities Connections
- Environmental Justice Impacts
- Construction Costs
- Operations and Maintenance

5.2.1 Relocation Impacts and Right-of-Way Acquisition

The Alternative Alignments under consideration utilize parcels owned by the Town where possible; however, the proposed Phase 3 UCT could potentially encroach on private property where it cannot be avoided.

5.2.2 Considerations Relating to Pedestrians and Bicyclists

Both Alternatives 1 and 2 will improve pedestrian and bicyclists' access to open space within the Town-owned property and facilitate future expansion to existing open space and recreational trails.

The proposed SUP is entirely separate from the roadway therefore safety considerations pertaining to vehicle traffic have not been considered. The Alternatives were ranked based on the accessibility of the terrain to all types of users including young children, elderly, and handicapped individuals. While the proposed SUP alignments adhere to best practices issued by the FHWA, steep grades and reasonable availability of rest intervals can determine the usability of a trail for this portion of the general public.

The Alternatives were ranked based on the length of pathway with grades greater than 5%.

Alternative 2 has 1570 LF of path with grades greater than 5% while Alternative 1 has 1650 LF of path greater than 5%.

5.2.3 Air Quality Impacts

Air quality in the study area would not be substantially affected by project construction because of the temporary nature of bikeway construction and the confined right-of-way.

An air quality analysis has not been performed as part of this Alternatives evaluation report nor is it deemed to be needed.

5.2.4 Noise Impacts

Construction activities would result in a moderate but temporary noise impact to receptors at various locations adjacent to proposed construction. Noise levels would vary depending on the type and number of pieces of equipment active at any one time. Noise impacts during construction can be mitigated by limiting the construction time periods.

5.2.5 Impacts to Outstanding Resource Water

Massachusetts Department of Environmental Protection (DEP) has designated certain waters for protection based on their outstanding socio-economic, recreational, ecological and/or aesthetic values. The Outstanding Resource Water within the vicinity of our project limit has been identified as a Public Water Supply Watershed, specifically the watershed of Echo Lake which serves as the headwaters of the Charles River.

Based on the MassGIS database, the proposed alignments do not impact Outstanding Resource Water.

5.2.6 Impacts to Wetlands

Potential impacts to wetlands falls under the jurisdiction of the DEP. The wetlands boundary information used in the Alternatives Analysis was derived from aerial infrared photography and field checked by the DEP's Wetlands Conservancy Program (WCP).

Based on the MassGIS data, there are several locations in the study area in which one or both of the proposed alignments appears to directly impact wetland areas and the 100' wetlands buffer zone.

- **Direct Impact to Freshwater Wetlands:** Alternative 1 would have the least direct impact to wetlands (1,594 SF). Alternative 2 would have the most direct impact (3,924 SF).
- **100' Buffer Area Impacts:** Alternative 1 would have the least impact within the 100' wetland buffer area (17,447 SF). Alternative 2 would have the most impact (32,592 SF).
- **200' Riverbank Impacts:** Neither Alternative would have an impact within a 200' Riverbank area.

Overall, Alternative 1 would have the least impact to wetlands, while Alternative 2 would have the most significant impact to wetlands of the two alternatives considered.

5.2.7 100 Year Floodplain Impacts

The most current National Flood Insurance Program (NFIP) data was used to determine the potential flood hazard for the area of study. The primary risk classifications used are the 1-percent-annual-chance flood event, the 0.2-percent-annual-chance flood event, and areas of minimal flood risk.

Based on the MassGIS database, the study area is not within the 100-year floodplain.

5.2.8 Certified Vernal Pools

The Natural Heritage and Endangered Species Program (NHESP) certifies vernal pools according to the Guidelines for the Certification of Vernal Pool Habitat (MA Division of Fisheries and Wildlife, 2009). Certified vernal pools are protected under the state Water Quality Certification regulations, the state Title 5 regulations, and the Forest Cutting Practices Act regulations, as well as those certified vernal pools that fall under the jurisdiction of the Massachusetts Wetlands Protection Act Regulations (310 CMR 10.00).

Based on the MassGIS database, the proposed alignments do not impact certified vernal pools.

5.2.9 NHESP Priority and Estimated Habitat

The NHESP maintains a database of the habitats of State-listed rare species in Massachusetts based on observations documented in the last 25 years. Areas delineated as Priority Habitats include wetlands, uplands and marine habitats. The Estimated Habitats of Rare Species are based on occurrences of rare wetland wildlife observed within the last 25 years and entered into the NHESP database.

Based on the MassGIS database, there are no NHESP Priority and Estimated Habitats within the project limits.

5.2.10 Areas of Critical Environmental Concern

The Secretary of Energy and Environmental Affairs (EEA) has designated places in Massachusetts that receive special recognition because of the quality and significance of their natural and cultural resources. These areas, identified as Areas of Critical Environmental Concern (ACEC), require a stricter environmental review of certain kinds of proposed development administered by the Department of Conservation and Recreation (DCR) on behalf of the EEA.

Based on the MassGIS database, there are no ACEC's identified within the project limits.

5.2.11 National Register Historic Properties and Districts

The historic resources considered in this analysis are those included in the Massachusetts Cultural Resource Information System (MACRIS) maintained by the Massachusetts Historical Commission (MHC). These resources include buildings, burial grounds, structures and objects as well as areas and districts recognized by the National Register of Historic Places and local historic and preservationist agencies.

Based on the MassGIS database, there are no National Register impacts anticipated within our project limits.

5.2.12 MassDEP Approved Wellhead Protection Area (Zone II)

Wellhead protection areas are important for protecting the recharge area around public water supply (PWS) groundwater sources. A Zone II is a wellhead protection area that has been determined by hydro-geologic modeling and approved by the DEP's Drinking Water Program (DWP). A Zone II classification is that area of an aquifer which contributes water to a well under the most severe pumping and recharge conditions that can be realistically anticipated (180 days of pumping at approved yield, with no recharge from precipitation).

Based on the MassGIS database, both alternatives impact Approved Wellhead Protection Areas. Alternative 2 has the least impact, encroaching on 18,361 SF of Approved Wellhead Protection Area; while Alternative 1 encroaches on 19,921 SF.

5.2.13 Hazardous Materials Sites

The DEP's Bureau of Waste Site Cleanup (BWSC) maintains a database of all reported releases of oil or hazardous material into the environment. The dataset reviewed in this Alternatives Analysis includes confirmed Hazardous Material Sites with Activity and Use Limitation (AUL). The AUL is a legal document that identifies activities and uses of the property that may or may not occur and the owner's obligation and maintenance conditions that must be followed to ensure the safe use of the property.

Based on the MassGIS database, there are no known hazardous materials sites located within our project limits.

5.2.14 Construction Impacts

Construction of the project will be performed primarily along existing footpath alignments in forested open space on Town-owned parcels. Impacts will be limited to the disturbance to natural habitats and existing recreational resources.

For the purposes of comparison, existing footpaths are considered an established intrusion in the forest environment. The alternatives were ranked based on the area of path segments (length X impact width) along such established right of way as compared to path segments proposed along undeveloped right of way.

Alternative 1 had the least area of impact along undeveloped right of way 19,500 SF (0.45 Ac). Alternative 2 had the most area of path along undeveloped right of way 77,440 SF (1.8 Ac).

5.2.15 Visual Impacts

This project will require substantial tree and brush clearing within existing woodland as well as earthwork in order to provide ADA compliant grades. Each Alignment segment has been evaluated based on the width of clearing and

earthwork required to meet standards for proper drainage, accessibility and requirements for safety. Alternatives have been compared based on the overall area of clearing required.

Alternative 1 will require 116,800 sf (2.7 Ac) of clearing, while Alternative 2 will require 125,640 sf (2.9Ac) of clearing.

5.2.16 Public Utilities

Known existing utilities within the project area include overhead electric transmission lines and underground gas transmission lines. Both Alternatives could potentially impact these facilities.

Alternative 1 (Segment 2) and Alternative 2 (Segment 2) each pass under the overhead wires in the powerline corridor owned by NStar. Alternative 1 (Segment 9) and Alternative 2 (Segment 8) cross over a gas transmission corridor which consists of an easement over Town-owned property. Any changes to grade or operation of equipment in these areas may not be allowed under existing agreements.

Involvement with these utilities in both the planning and design phases are recommended to determine feasibility and safety of construction.

5.2.17 Public Facilities

Both Alternatives will improve bicycle and pedestrian access from the Center School to Town-owned open space for recreation and potentially transportation purposes.

5.2.18 Environmental Justice

According to the MassGIS database, the project is not located within an area identified as an Environmental Justice Zone.

5.2.19 Construction Cost

Preliminary construction estimates have been calculated based on four typical cross sections developed for an SUP alignment along an undeveloped right-of-way. Items include site clearing, excavation for and placement of new pavement structure, boardwalk structure, loam and seed, and signing and striping.

Anticipated cost for each item was researched using the most current available (9/2015-9/2016) MassDOT Weighted Bid Prices, which are based on actual competitive bid pricing on MassDOT construction contracts. Contingencies for Mobilization (3%), Construction (40%), and additional MassDOT Construction (25%) are based on empirical data and are included in the overall preliminary construction estimates.

The Alternative 2 preliminary construction estimate is the lowest ($2,330,000), while Alternative 1 preliminary construction estimate is the highest ($2,560,000).

For survey and mapping, soil borings, geotechnical design, path design, permitting, and construction bidding services, 15% - 20% of the construction cost should be budgeted.

5.2.20 Maintenance & Operations

Maintenance

Basic maintenance activities include keeping the trail surface free of debris, identifying and correcting surface hazards, keeping signs and pavement markings in good condition and cutting back encroaching vegetation to maintain adequate sight distances on the bikeway and at road crossings. Having a written operations and maintenance plan and an emergency response plan will also enable town officials to determine manpower and budgets needed to implement these plans.

We recommend coordination with the Town Public Safety Officers, School Department and the Department of Public Works regarding access and maintenance so that their recommendations can be incorporated into the project design.

Operations

The project vision for this portion of the Bikeway is a continuous facility for non-motorized travel with portions suitable for use by both bicyclists and pedestrians. The alternatives presented comply with accepted industry standards and criteria for an SUP and encourages users to comply with uniform traffic operations and laws. Thus the signs, pavement markings and other amenities are designed to convey that message through the use of common standards of color, shape and graphics as used on typical roadway signs without "over-signing" the natural landscape.

It is recommended that for the off-road SUP sections, "trail use rules" be posted at trail access points, as appropriate. Additionally, it is recommended that the Town review their existing by-laws as they relate to trails and shared-use facilities to verify if changes or additions are needed.

6.1 Conclusion

The two alternative alignments were scored based the favorability of the 20 criteria described above. Scoring was based on which alternative was the most effective or had the least impact for each of the criteria. A score of 2 was the most favorable, while a score of 1 was the least favorable. The scores were totaled for each to arrive at the final score to determine the most favorable alternative overall.

Alignment 1 with a score of 21 points was the most favorable in this analysis, while Alternative 2 was the least favorable with 19 points.

November 07, 2016

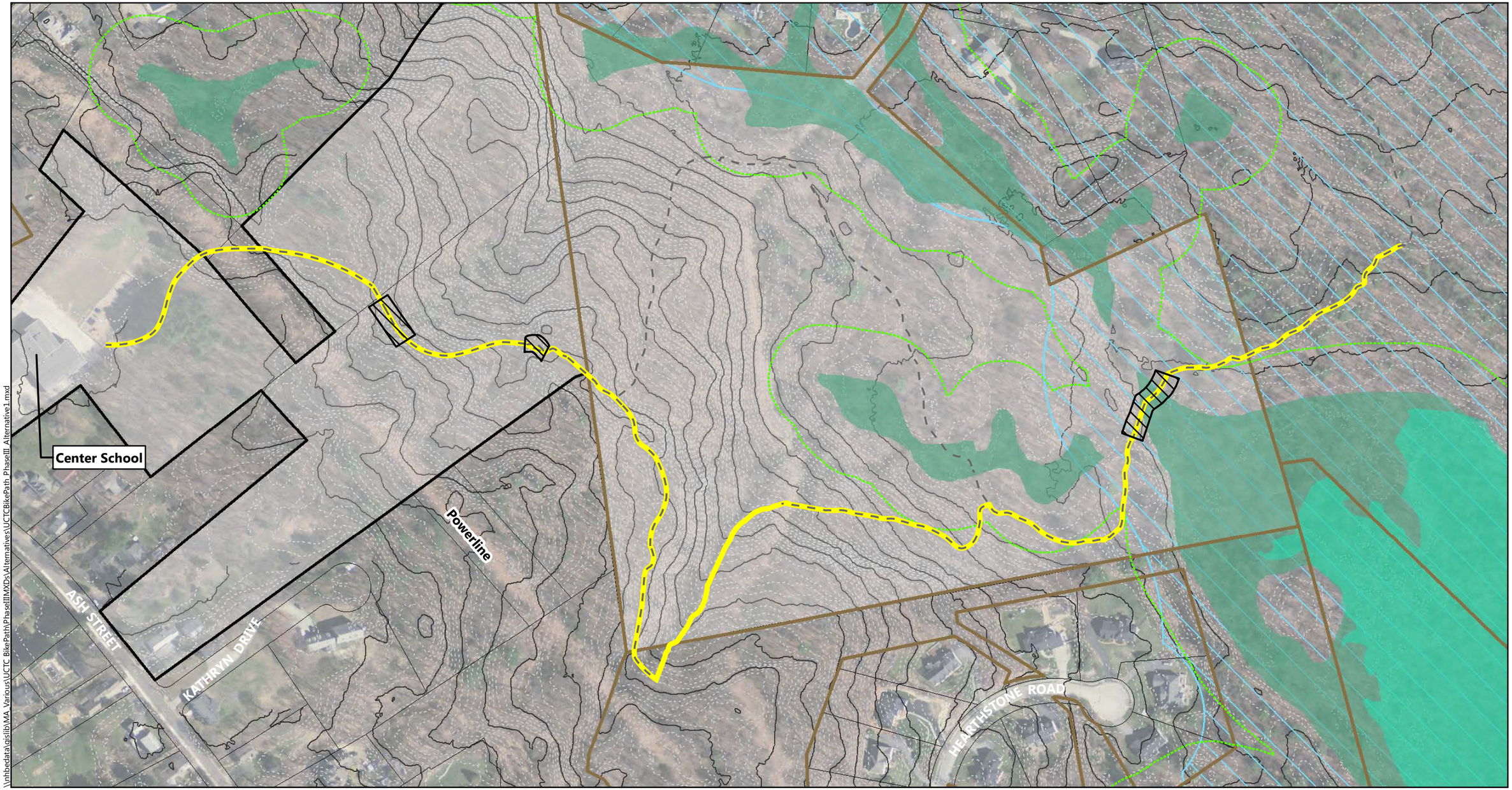

\\nhbedata\gislib\MA_Various\UCTC BikePath\PhaseIIIMXDs\Alternatives\UCTCBikePath_PhaseIII_Alternative1.mxd

0 100 200 400 Feet

Alternative 1
Existing Path
MassDEP Wetland
100-ft Wetland Buffer
MassDEP Approved Wellhead Protection Areas (Zone II)
100-Year Floodplain
National Register Buldings
MHC Historic District
Conservation/Public Land
Town Property Boundary
Assessor's Tax Parcel
Proposed Boardwalk
2-ft Contour Intervals
10-ft Index Contour

Upper Charles Trail | Hopkinton, Massachusetts

Upper Charles Trail Phase III
Alternative 1 Overview

Source Info: MassGIS, VHB

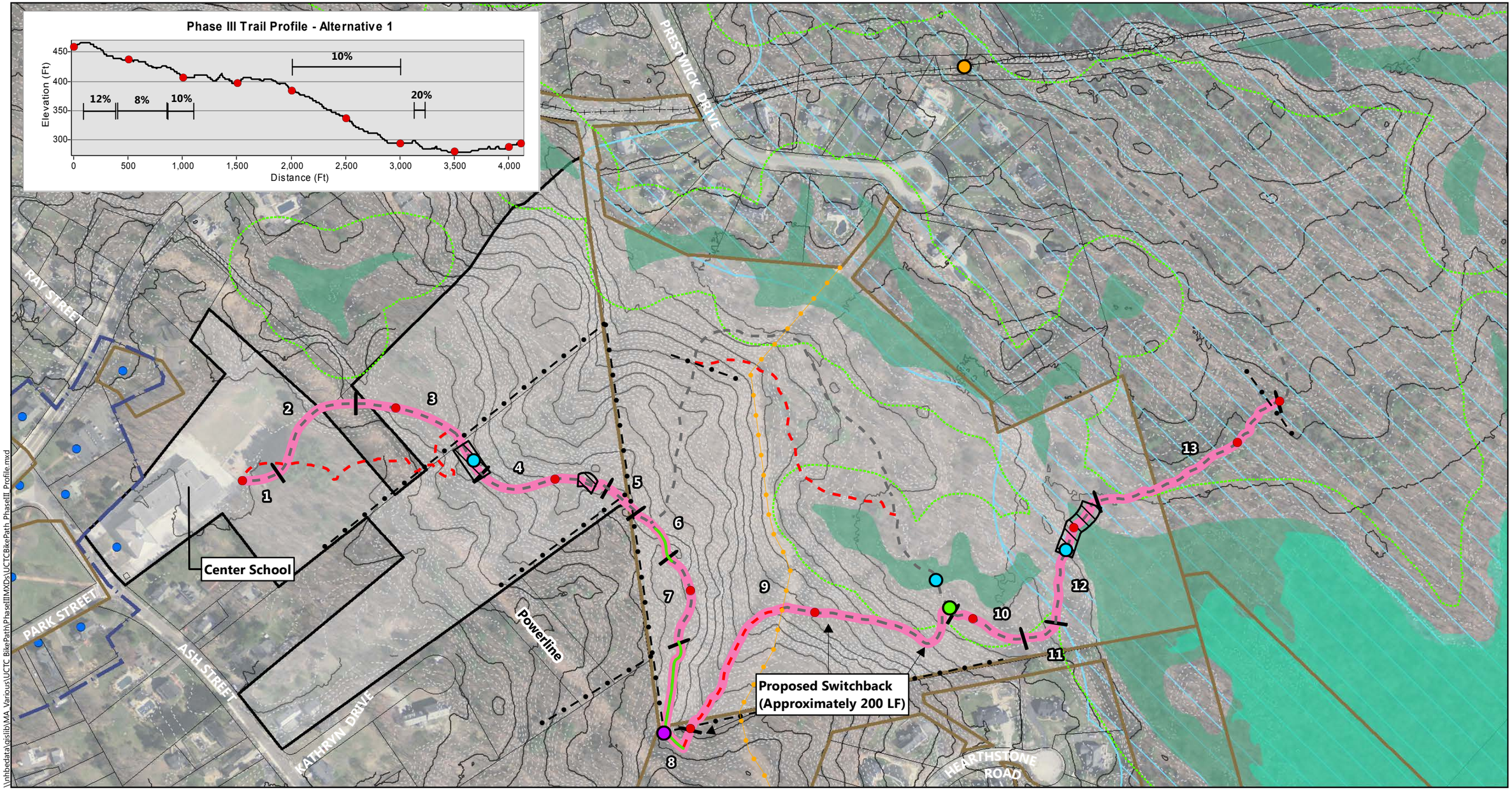

0 125 250 500 Feet

Profile Path/Proposed UCT
Proposed Path
Existing Path
Flagged Path
Profile Path/Proposed UCT Segment Break
Railroad Bed
Gas Line
StoneWall
Rock Cut
Boardwalk Crossing Required
500 Ft. Stations
Railroad Cattle Pass
Trail Junction
Existing Foot Bridge
Proposed Foot Bridge
MassDEP Wetland
100-ft Wetland Buffer
MassDEP Approved Wellhead Protection Areas (Zone II)
100-Year Floodplain
Conservation/Public Land
National Register Buildings
MHC Historic District
Town Property Boundary
Assessor's Tax Parcel

Upper Charles Trail | Hopkinton, Massachusetts

The following resources are not present within the vicinity of the Property Area:

1. Areas of Critical Environmental Concern (ACEC)
2. NHESP Potential Vernal Pools and Priority Habitat
3. Chapter 21E Sites
4. Hazardous Waste Generators
5. NHESP Certifield Vernal Pools

Upper Charles Trail Phase III Alternative 1

Source Info: MassGIS, VHB

\\nhbedata\gisilb\MA_Various\UCTC_BikePath\PhaseIIIMXDs\UCTCBikePath_PhaseIII_Profile.mxd

November 07, 2016

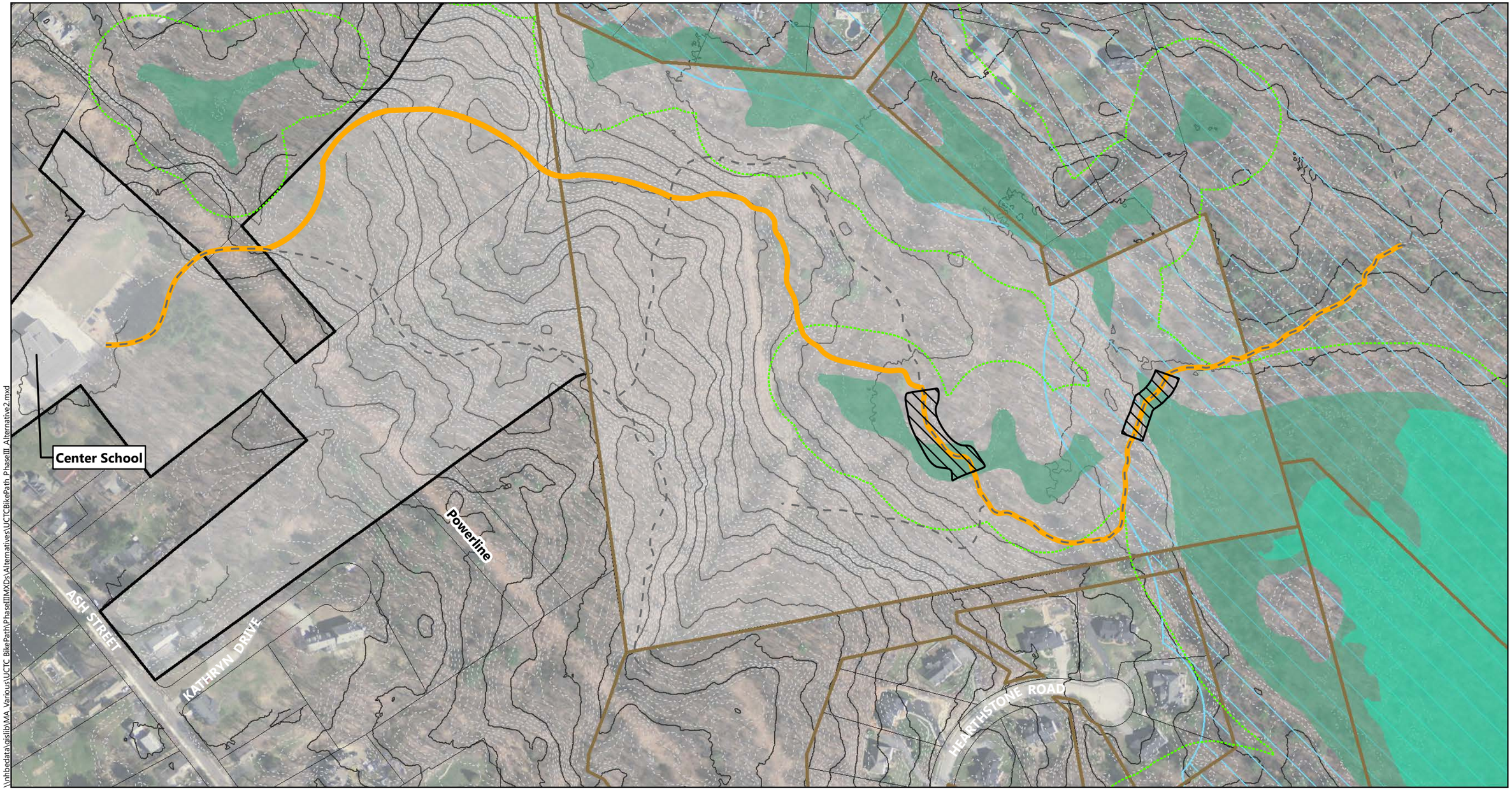

\\nhbedata\gislib\MA_Various\UCTC BikePath\PhaseIII\MXDs\Alternatives\UCTCBikePath_PhaseIII_Alternative2.mxd

0 100 200 400 Feet

- Alternative 2
- Existing Path
- MassDEP Wetland
- 100-ft Wetland Buffer
- MassDEP Approved Wellhead Protection Areas (Zone II)
- 100-Year Floodplain
- National Register Buldings
- MHC Historic District
- Conservation/Public Land
- Town Property Boundary
- Assessor's Tax Parcel
- Proposed Boardwalk
- 2-ft Contour Intervals
- 10-ft Index Contour

Upper Charles Trail | Hopkinton, Massachusetts

Upper Charles Trail Phase III
Alternative 2 Overview

Source Info: MassGIS, VHB

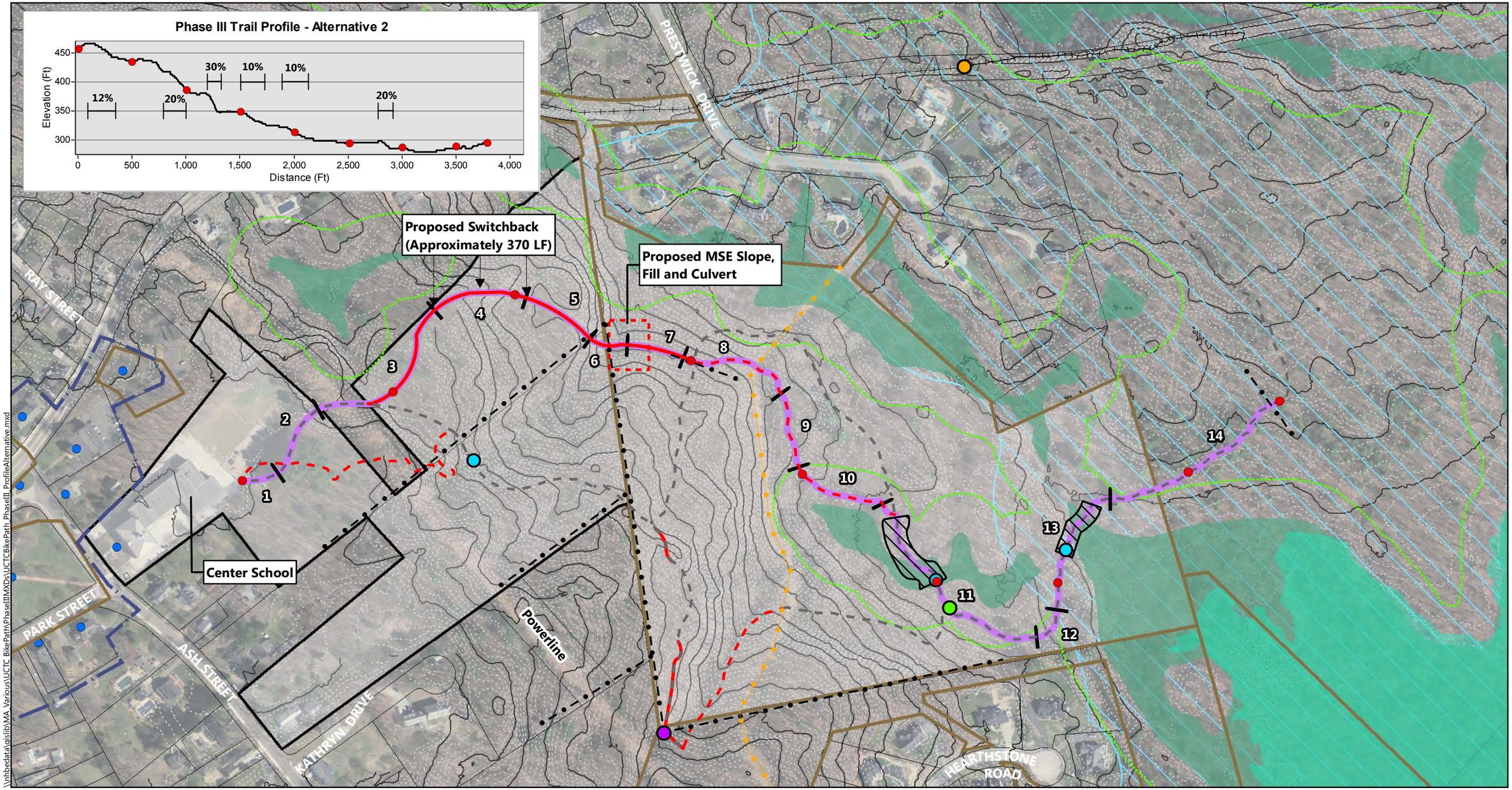

0 125 250 500 Feet

Profile Path/Proposed UCT
Proposed Path
Existing Path
Flagged Path
Profile Path/Proposed UCT Segment Break
Railroad Bed
Stone Wall
Gas Line
Boardwalk Crossing Required
500 Ft. Stations
Railroad Cattle Pass
Trail Junction
Existing Foot Bridge
Proposed Foot Bridge
MassDEP Wetland
100-ft Wetland Buffer
MassDEP Approved Wellhead Protection Areas (Zone II)
100-Year Floodplain
Conservation/Public Land
National Register Buildings
MHC Historic District
Assessor's Tax Parcel

Upper Charles Trail | Hopkinton, Massachusetts

The following resources are not present within the vicinity of the Property Area:

1. Areas of Critical Environmental Concern (ACEC)
2. NHESP Potential Vernal Pools and Priority Habitat
3. Chapter 21E Sites
4. Hazardous Waste Generators
5. NHESP Certifield Vernal Pools

Upper Charles Trail Phase III Alternative 2

Source Info: MassGIS, VHB

\\nhbedata\gisilb\MA_Various\UCTC_BikePath\PhaseIIIMXDs\UCTCBikePath_PhaseIII_ProfileAlternative.mxd

Alternatives Ranking Matrix

#	Impact Criteria	Alternative 1	Rank[1]	Alternative 2	Rank[1]
1.	Relocation Impacts and ROW Acquisition	May Require minor acquisitions.	1	May Require minor acquisitions.	1
2.	Considerations Relating to Pedestrians and Bicyclists	This alternative has the most length of path with grades > 5% (1,650LF).	1	This alternative has the least length of path with grades > 5% (1,570LF).	2
3.	Air Quality Impacts	Temporary minor impacts during construction	1	Temporary minor impacts during construction	1
4.	Noise Impacts	Temporary minor impacts during construction	1	Temporary minor impacts during construction	1
5.	Outstanding Resource Water (ORW) Impacts	There are no Outstanding Resource Waters within our project limits.	0	There are no Outstanding Resource Waters within our project limits.	0
6.	Wetlands	Yes, the off-road bikeway would alter Freshwater Wetlands and 100-Foot Perimeter Wetland located along its route.	2	Yes, the off-road bikeway would alter Freshwater Wetlands and 100-Foot Perimeter Wetland located along its route.	1
		1,594 SF Direct Impacts	2	3,924 SF Direct Impacts	1
		17,447 SF 100' Buffer Area Impacts	2	32,592 SF 100' Buffer Area Impacts	1
		0 SF 200' Riverbank Impacts	0	0 SF 200' Riverbank Impacts	0
7.	Floodplain Impacts	Project limits are not in floodplain.	0	Project limits are not in floodplain.	0
8.	Certified Vernal Pools	There are no certified vernal pools within the project limits.	0	There are no certified vernal pools within the project limits.	0
9.	Threatened or Endangered Species (NHESP)	There are no Priority Habitats within the project limits.	0	There are no Priority Habitats within the project limits.	0
10.	Areas of Critical Environmental Concern (ACEC)	There are no ACEC's within the project limits.	0	There are no ACEC's within the project limits.	0
11.	National Register Districts	There are no National Register Districts within the project limits.	0	There are no National Register Districts within the project limits.	0
12.	MassDEP Approved Wellhead Protection Area(Zone II)	Yes, this alternative does encroach within MassDEP Approved Wellhead protection Areas (19,921 SF).	1	Yes, this alternative does encroach within MassDEP Approved Wellhead protection Areas (18,361 SF).	2
13.	Hazardous Waste Sites	There are no Hazardous Materials Sites within our project limits.	0	There are no Hazardous Materials Sites within our project limits.	0
14.	Construction Impacts	Yes. Clearing and earth work of undeveloped forest right of way 19,500 SF (0.45 Ac) .	2	Yes. Clearing and earth work of undeveloped forest right of way 77,440 SF (1.8 Ac) .	1
15.	Visual Impacts	Yes. Clearing and vegetation removal totalling 116,800 SF (2.68 AC).	2	Yes. Clearing and vegetation removal totalling 125,640 SF (2.88 AC).	1
16.	Public Utilities	May impact existing overhead utilities on Segment 2 (overhead electric) and Segment 9 (underground gas).	1	May impact existing overhead utilities on Segment 2 (overhead electric) and Segment 8 (underground gas).	1
17.	Public Facilities Connections	Connects Ceter School with Town-owned open space.	2	Connects Ceter School with Town-owned open space.	2
18.	Environmental Justice	There are no Environmental Justice areas within our project limits.	0	There are no Environmental Justice areas within our project limits.	0
19.	Construction/Design Cost	$2,560,000/$384, 000 - $512,000	1	$2,330,000/$349,500 - $466,000	2
20.	Operations and Maintenance	Recommend a written operations and maintenance plan and an emergency response plan.	2	Recommend a written operations and maintenance plan and an emergency response plan.	2
	Final Score		21		19
	Final Ranking		2		1

[1] 2=More Preferred, 1=Less Preferred

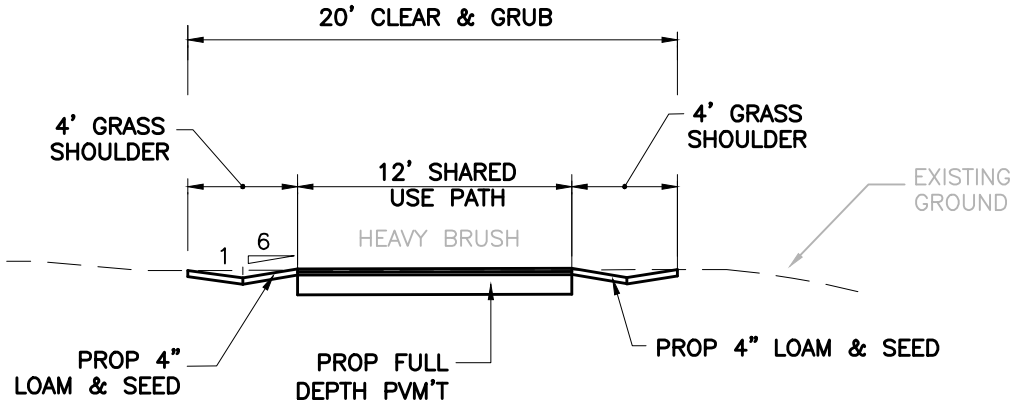

GRADE </= 5%

EXISTING SECTION
LOOKING SOUTH

PAVEMENT NOTES:

PROPOSED FULL DEPTH PAVEMENT
SURFACE: 1-3/4" SUPERPAVE SURFACE COURSE 12.5 (SSC-12.5) OVER
2-1/4" SUPERPAVE INTERMEDIATE COURSE 19.0 (SIC-19.0) OVER

SUBBASE: 8" GRAVEL BORROW, TYPE b

Typical Section
Upper Charles River Trail
Phase III
Town of Hopkinton, MA

Section 1

9/30/2016

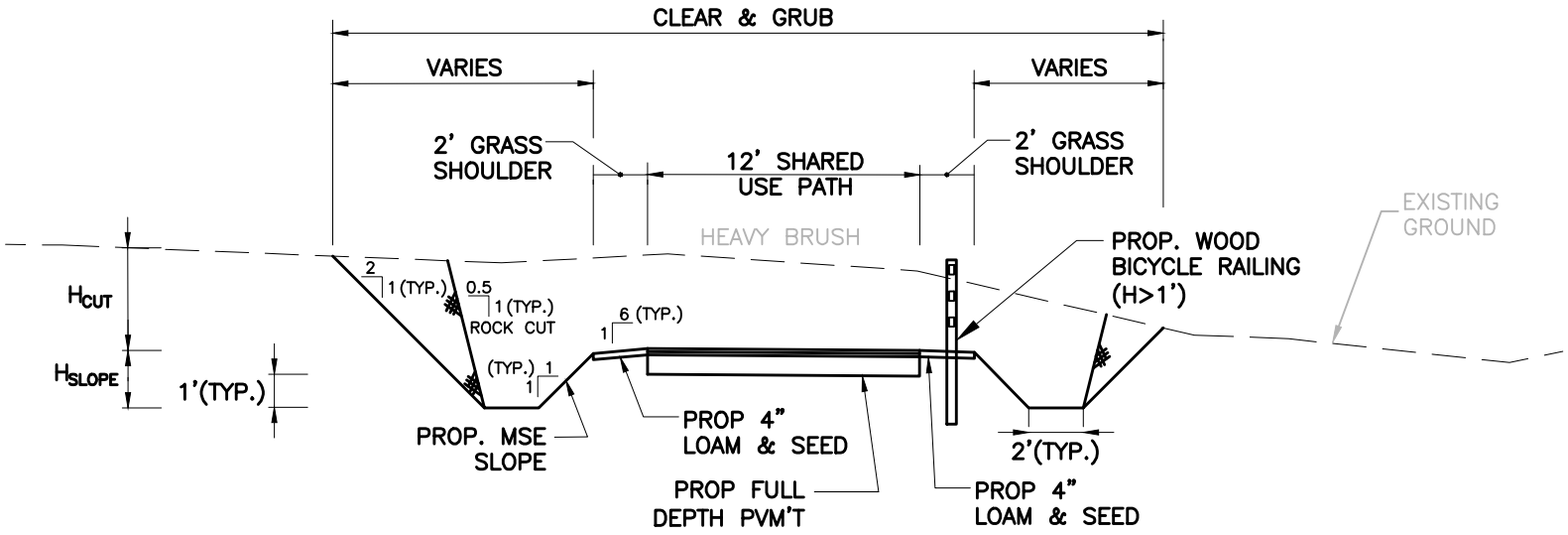

CUT SECTION

EXISTING SECTION
LOOKING SOUTH

PAVEMENT NOTES:

PROPOSED FULL DEPTH PAVEMENT
SURFACE: 1-3/4" SUPERPAVE SURFACE COURSE 12.5 (SSC-12.5) OVER
2-1/4" SUPERPAVE INTERMEDIATE COURSE 19.0 (SIC-19.0) OVER

SUBBASE: 8" GRAVEL BORROW, TYPE b

Typical Section
Upper Charles River Trail
Phase III
Town of Hopkinton, MA

Section 2

9/30/2016

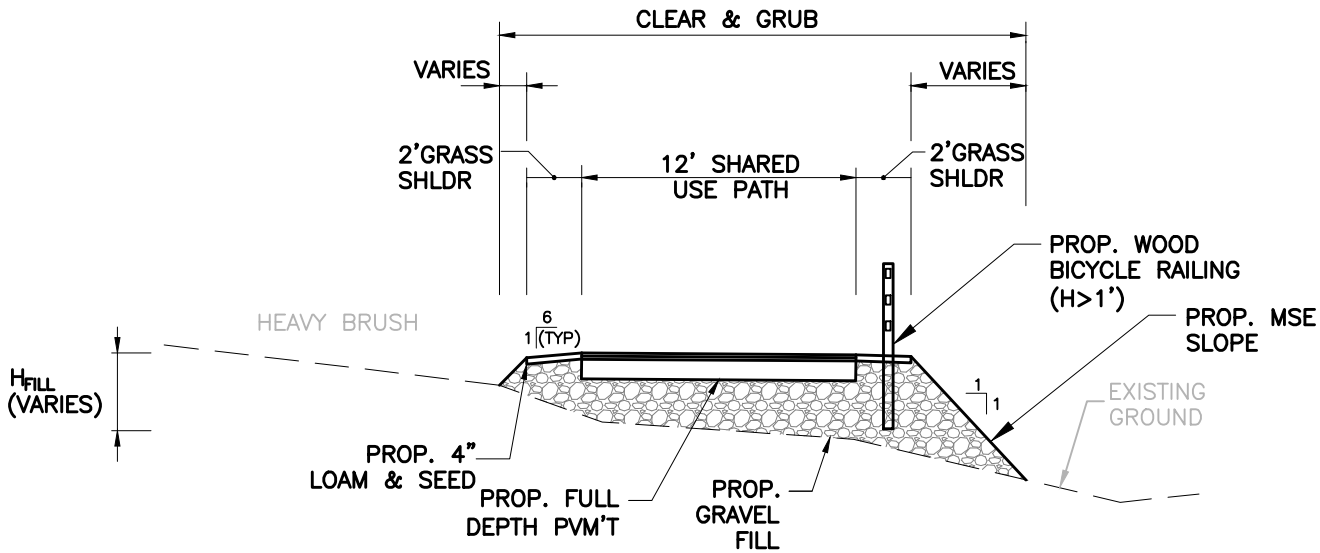

FILL SECTION

EXISTING SECTION
LOOKING SOUTH

PAVEMENT NOTES:

PROPOSED FULL DEPTH PAVEMENT

SURFACE: 1–3/4" SUPERPAVE SURFACE COURSE 12.5 (SSC–12.5) OVER 2–1/4" SUPERPAVE INTERMEDIATE COURSE 19.0 (SIC–19.0) OVER

SUBBASE: 8" GRAVEL BORROW, TYPE b

Typical Section
Upper Charles River Trail
Phase III
Town of Hopkinton, MA

Section 3

9/30/2016

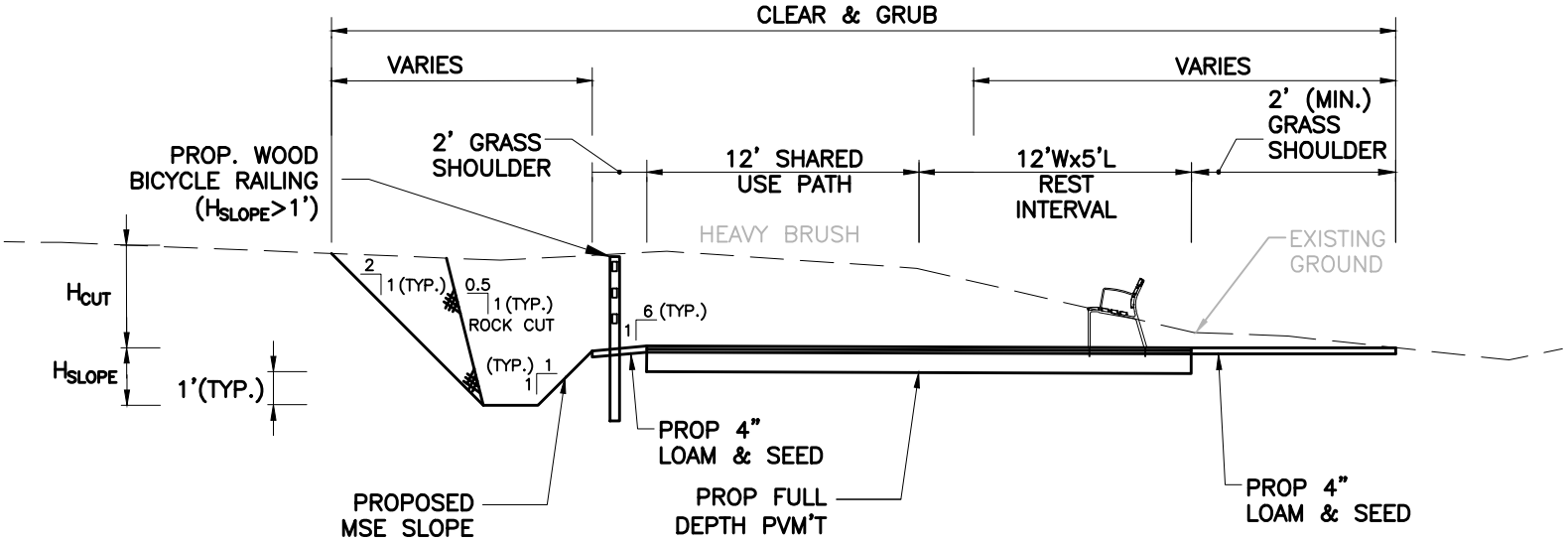

CUT SECTION GRADE > 5%
LOOKING SOUTH

EXISTING SECTION
LOOKING SOUTH

MAX DISTANCE BETWEEN REST INTERVALS
5% TO 8.3% 200FT
8.3% TO 10% 30FT
10% TO 12.5% 10 FT

PAVEMENT NOTES:

PROPOSED FULL DEPTH PAVEMENT
SURFACE: 1-3/4" SUPERPAVE SURFACE COURSE 12.5 (SSC-12.5) OVER 2-1/4" SUPERPAVE INTERMEDIATE COURSE 19.0 (SIC-19.0) OVER

SUBBASE: 8" GRAVEL BORROW, TYPE b

Typical Section
Upper Charles River Trail
Phase III
Town of Hopkinton, MA

Section 4

9/30/2016

1 Cedar Street
Suite 400
Providence
Rhode Island 02903
401-272-8100

Upper Charles River Trail Phase III
Hopkinton, Massachusetts
October 7, 2016

Total Estimated Construction Cost Alignment 1			Total Cost
Segment 1	100 LF	$	24,095
Segment 2	300 LF	$	73,226
Segment 3	400 LF	$	-
Segment 4	350 LF	$	178,188
Segment 5	100 LF	$	22,975
Segment 6	150 LF	$	47,451
Segment 7	250 LF	$	55,623
Segment 8	350 LF	$	103,502
Segment 9	1150 LF	$	262,244
Segment 10	200 LF	$	44,740
Segment 11	100 LF	$	24,655
Segment 12	350 LF	$	373,012
Segment 13	550 LF	$	120,919
	4350 LF		
	SUBTOTAL:	$	1,330,630
	Mobilization @ 3%	$	39,919
	Contingency (40%)	$	532,252
	MassDOT Construction Contingency (25%)	$	332,658
		$	2,235,459
	SAY:	$	2,240,000

*Estimate is for comparison puposes only. Estimate does not include costs of design, permitting, ROW acquisition, utility work, lighting improvements.

1 Cedar Street
Suite 400
Providence
Rhode Island 02903
401-272-8100

Upper Charles River Trail - Phase III
Alignment 1/Segment 1 (100 LF+/-)
Hopkinton, Massachusetts
September 30, 2016

Segment Length (ft)	100
Impact Width (ft)	32
Proposed Section (1-4)	2
Proposed Grade of Section (%)	8

Description	Unit Price	Quantity	Total Cost
Full Depth Pavement - Bikeway (Including Excavation)	$60.00 /SY	133 SY	$8,000.00
Loam Borrow & Seed	$8.00 /SY	90 SY	$720.00
Signing, Striping & Pavement Markings	$400.00 /LS	1 LS	$400.00
Clearing and Grubbing	$5.00 /SY	356 SY	$1,777.78
Erosion Control Barrier	$7.50 /FT	200 FT	$1,500.00
Additional Earthwork (25% of total length)	$35.00 /CY	56 CY	$1,944.44
		SUBTOTAL:	$14,342.22
		Mobilization @ 3%	$430.27
		Contingency (40%)	$5,736.89
		MassDOT Construction Contingency (25%)	$3,585.56
		Construction Total	$24,094.93
		SAY:	$30,000.00

* Prices Based on Weighted Average Bid Prices (August 2016)

1 Cedar Street
Suite 400
Providence
Rhode Island 02903
401-272-8100

Upper Charles River Trail - Phase III
Alignment 1/Segment 2 (250 LF+/-)
Hopkinton, Massachusetts
September 30, 2016

Segment Length (ft)	300
Impact Width (ft)	44
Proposed Section(s) (1-4)	2/3
Proposed Grade of Section (%)	8

Description	Unit Price	Quantity	Total Cost
Full Depth Pavement - Bikeway (Including Excavation)	$60.00 /SY	400 SY	$24,000.00
Loam Borrow & Seed	$8.00 /SY	90 SY	$720.00
Signing, Striping & Pavement Markings	$1,200.00 /LS	1 LS	$1,200.00
Clearing and Grubbing	$5.00 /SY	1,467 SY	$7,333.33
Erosion Control Barrier	$7.50 /FT	600 FT	$4,500.00
Additional Earthwork (25% of total length)	$35.00 /CY	167 CY	$5,833.33
		SUBTOTAL:	$43,586.67
		Mobilization @ 3%	$1,307.60
		Contingency (40%)	$17,434.67
		MassDOT Construction Contingency (25%)	$10,896.67
		Construction Total	$73,225.60
		SAY:	$80,000.00

* Prices Based on Weighted Average Bid Prices (August 2016)

1 Cedar Street
Suite 400
Providence
Rhode Island 02903
401-272-8100

Upper Charles River Trail - Phase III
Alignment 1/Segment 3 (400 LF+/-)
Hopkinton, Massachusetts
September 30, 2016

Segment Length (ft)	400
Impact Width (ft)	20
Proposed Section(s) (1-4)	3
Proposed Grade of Section (%)	5

Description	Unit Price	Quantity	Total Cost
Full Depth Pavement - Bikeway (Including Excavation)	$60.00 /SY	533 SY	$32,000.00
Loam Borrow & Seed	$8.00 /SY	90 SY	$720.00
Signing, Striping & Pavement Markings	$1,600.00 /LS	1 LS	$1,600.00
Clearing and Grubbing	$5.00 /SY	889 SY	$4,444.44
Erosion Control Barrier	$7.50 /FT	800 FT	$6,000.00
Boardwalk	$1,000.00 /FT	60 FT	$60,000.00
Additional Earthwork (25% of total length)	$35.00 /CY	222 CY	$7,777.78
		SUBTOTAL:	$112,542.22
		Mobilization @ 3%	$3,376.27
		Contingency (40%)	$45,016.89
		MassDOT Construction Contingency (25%)	$28,135.56
		Construction Total	$189,070.93
		SAY:	$190,000.00

* Prices Based on Weighted Average Bid Prices (August 2016)

1 Cedar Street
Suite 400
Providence
Rhode Island 02903
401-272-8100

Upper Charles River Trail - Phase III
Alignment 1/Segment 4 (100 LF+/-)
Hopkinton, Massachusetts
September 30, 2016

Segment Length (ft)	350
Impact Width (ft)	20
Proposed Section (1-4)	1
Proposed Grade of Section (%)	4

Description	Unit Price	Quantity	Total Cost
Full Depth Pavement - Bikeway (Including Excavation)	$60.00 /SY	467 SY	$28,000.00
Loam Borrow & Seed	$8.00 /SY	90 SY	$720.00
Signing, Striping & Pavement Markings	$1,400.00 /LS	1 LS	$1,400.00
Clearing and Grubbing	$5.00 /SY	778 SY	$3,888.89
Erosion Control Barrier	$7.50 /FT	700 FT	$5,250.00
Additional Earthwork (25% of total length)	$35.00 /CY	194 CY	$6,805.56
Boardwalk	$1,000.00 /FT	60 FT	$60,000.00
		SUBTOTAL:	$106,064.44
		Mobilization @ 3%	$3,181.93
		Contingency (40%)	$42,425.78
		MassDOT Construction Contingency (25%)	$26,516.11
		Construction Total	$178,188.27
		SAY:	$180,000.00

* Prices Based on Weighted Average Bid Prices (August 2016)

1 Cedar Street
Suite 400
Providence
Rhode Island 02903
401-272-8100

Upper Charles River Trail - Phase III
Alignment 1/Segment 5 (100 LF+/-)
Hopkinton, Massachusetts
September 30, 2016

Segment Length (ft)	100
Impact Width (ft)	20
Proposed Section (1-4)	1
Proposed Grade of Section (%)	0

Description	Unit Price	Quantity	Total Cost
Full Depth Pavement - Bikeway (Including Excavation)	$60.00 /SY	133 SY	$8,000.00
Loam Borrow & Seed	$8.00 /SY	90 SY	$720.00
Signing, Striping & Pavement Markings	$400.00 /LS	1 LS	$400.00
Clearing and Grubbing	$5.00 /SY	222 SY	$1,111.11
Erosion Control Barrier	$7.50 /FT	200 FT	$1,500.00
Additional Earthwork (25% of total length)	$35.00 /CY	56 CY	$1,944.44
		SUBTOTAL:	$13,675.56
		Mobilization @ 3%	$410.27
		Contingency (40%)	$5,470.22
		MassDOT Construction Contingency (25%)	$3,418.89
		Construction Total	$22,974.93
		SAY:	$30,000.00

* Prices Based on Weighted Average Bid Prices (August 2016)

1 Cedar Street
Suite 400
Providence
Rhode Island 02903
401-272-8100

Upper Charles River Trail - Phase III
Alignment 1/Segment 6 (150 LF+/-)
Hopkinton, Massachusetts
September 30, 2016

Segment Length (ft)	150
Impact Width (ft)	32
Proposed Section (1-4)	2
Proposed Grade of Section (%)	3

Description	Unit Price	Quantity	Total Cost
Full Depth Pavement - Bikeway (Including Excavation)	$60.00 /SY	200 SY	$12,000.00
Loam Borrow & Seed	$8.00 /SY	90 SY	$720.00
Signing, Striping & Pavement Markings	$600.00 /LS	1 LS	$600.00
Clearing and Grubbing	$5.00 /SY	533 SY	$2,666.67
Erosion Control Barrier	$7.50 /FT	300 FT	$2,250.00
Class A Rock Excavation "Rock Cut" 24"depth	$66.72 /CY	150 LF	$10,008.00
		SUBTOTAL:	$28,244.67
		Mobilization @ 3%	$847.34
		Contingency (40%)	$11,297.87
		MassDOT Construction Contingency (25%)	$7,061.17
		Construction Total	$47,451.04
		SAY:	$50,000.00

* Prices Based on Weighted Average Bid Prices (August 2016)

1 Cedar Street
Suite 400
Providence
Rhode Island 02903
401-272-8100

Upper Charles River Trail - Phase III
Alignment 1/Segment 7 (250 LF+/-)
Hopkinton, Massachusetts
September 30, 2016

Segment Length (ft)	250
Impact Width (ft)	20
Proposed Section (1-4)	1
Proposed Grade of Section (%)	4

Description	Unit Price	Quantity	Total Cost
Full Depth Pavement - Bikeway (Including Excavation)	$60.00 /SY	333 SY	$20,000.00
Loam Borrow & Seed	$8.00 /SY	90 SY	$720.00
Signing, Striping & Pavement Markings	$1,000.00 /LS	1 LS	$1,000.00
Clearing and Grubbing	$5.00 /SY	556 SY	$2,777.78
Erosion Control Barrier	$7.50 /FT	500 FT	$3,750.00
Additional Earthwork (25% of total length)	$35.00 /CY	139 CY	$4,861.11
		SUBTOTAL:	$33,108.89
		Mobilization @ 3%	$993.27
		Contingency (40%)	$13,243.56
		MassDOT Construction Contingency (25%)	$8,277.22
		Construction Total	$55,622.93
		SAY:	$60,000.00

* Prices Based on Weighted Average Bid Prices (August 2016)

1 Cedar Street
Suite 400
Providence
Rhode Island 02903
401-272-8100

Upper Charles River Trail - Phase III
Alignment 1/Segment 8 (350 LF+/-)
Hopkinton, Massachusetts
September 30, 2016

Segment Length (ft)	350
Impact Width (ft)	32
Proposed Section (1-4)	3
Proposed Grade of Section (%)	4

Description	Unit Price	Quantity	Total Cost
Full Depth Pavement - Bikeway (Including Excavation)	$60.00 /SY	467 SY	$28,000.00
Loam Borrow & Seed	$8.00 /SY	90 SY	$720.00
Signing, Striping & Pavement Markings	$1,400.00 /LS	1 LS	$1,400.00
Clearing and Grubbing	$5.00 /SY	1,244 SY	$6,222.22
Erosion Control Barrier	$7.50 /FT	700 FT	$5,250.00
Class A Rock Excavation "Rock Cut" 24"depth	$66.72 /CY	300 LF	$20,016.00
		SUBTOTAL:	$61,608.22
		Mobilization @ 3%	$1,848.25
		Contingency (40%)	$24,643.29
		MassDOT Construction Contingency (25%)	$15,402.06
		Construction Total	$103,501.81
		SAY:	$110,000.00

* Prices Based on Weighted Average Bid Prices (August 2016)

1 Cedar Street
Suite 400
Providence
Rhode Island 02903
401-272-8100

Upper Charles River Trail - Phase III
Alignment 1/Segment 9 (950 LF+/-)
Hopkinton, Massachusetts
September 30, 2016

Segment Length (ft)	1,150
Impact Width (ft)	30
Proposed Section (1-4)	4
Proposed Grade of Section (%)	8

Description	Unit Price	Quantity	Total Cost
Full Depth Pavement - Bikeway (Including Excavation)	$60.00 /SY	1,533 SY	$92,000.00
Loam Borrow & Seed	$8.00 /SY	90 SY	$720.00
Signing, Striping & Pavement Markings	$4,600.00 /LS	1 LS	$4,600.00
Clearing and Grubbing	$5.00 /SY	3,833 SY	$19,166.67
Erosion Control Barrier	$7.50 /FT	2,300 FT	$17,250.00
Additional Earthwork (25% of total length)	$35.00 /CY	639 CY	$22,361.11
		SUBTOTAL:	$156,097.78
		Mobilization @ 3%	$4,682.93
		Contingency (40%)	$62,439.11
		MassDOT Construction Contingency (25%)	$39,024.44
		Construction Total	$262,244.27
		SAY:	$270,000.00

* Prices Based on Weighted Average Bid Prices (August 2016)

1 Cedar Street
Suite 400
Providence
Rhode Island 02903
401-272-8100

Upper Charles River Trail - Phase III
Alignment 1/Segment 10 (200 LF+/-)
Hopkinton, Massachusetts
September 30, 2016

Segment Length (ft)	200
Impact Width (ft)	20
Proposed Section (1-4)	1
Proposed Grade of Section (%)	3

Description	Unit Price	Quantity	Total Cost
Full Depth Pavement - Bikeway (Including Excavation)	$60.00 /SY	267 SY	$16,000.00
Loam Borrow & Seed	$8.00 /SY	90 SY	$720.00
Signing, Striping & Pavement Markings	$800.00 /LS	1 LS	$800.00
Clearing and Grubbing	$5.00 /SY	444 SY	$2,222.22
Erosion Control Barrier	$7.50 /FT	400 FT	$3,000.00
Additional Earthwork (25% of total length)	$35.00 /CY	111 CY	$3,888.89
		SUBTOTAL:	$26,631.11
		Mobilization @ 3%	$798.93
		Contingency (40%)	$10,652.44
		MassDOT Construction Contingency (25%)	$6,657.78
		Construction Total	$44,740.27
		SAY:	$50,000.00

* Prices Based on Weighted Average Bid Prices (August 2016)

1 Cedar Street
Suite 400
Providence
Rhode Island 02903
401-272-8100

Upper Charles River Trail - Phase III
Alignment 1/Segment 11 (100 LF+/-)
Hopkinton, Massachusetts
September 30, 2016

Segment Length (ft)	100
Impact Width (ft)	38
Proposed Section (1-4)	3
Proposed Grade of Section (%)	10

Description	Unit Price	Quantity	Total Cost
Full Depth Pavement - Bikeway (Including Excavation)	$60.00 /SY	133 SY	$8,000.00
Loam Borrow & Seed	$8.00 /SY	90 SY	$720.00
Signing, Striping & Pavement Markings	$400.00 /LS	1 LS	$400.00
Clearing and Grubbing	$5.00 /SY	422 SY	$2,111.11
Erosion Control Barrier	$7.50 /FT	200 FT	$1,500.00
Additional Earthwork (25% of total length)	$35.00 /CY	56 CY	$1,944.44
		SUBTOTAL:	$14,675.56
		Mobilization @ 3%	$440.27
		Contingency (40%)	$5,870.22
		MassDOT Construction Contingency (25%)	$3,668.89
		Construction Total	$24,654.93
		SAY:	$30,000.00

* Prices Based on Weighted Average Bid Prices (August 2016)

1 Cedar Street
Suite 400
Providence
Rhode Island 02903
401-272-8100

Upper Charles River Trail - Phase III
Alignment 1/Segment 12 (350 LF+/-)
Hopkinton, Massachusetts
September 30, 2016

Segment Length (ft)	350
Impact Width (ft)	26
Proposed Section (1-4)	3
Proposed Grade of Section (%)	3

Description	Unit Price	Quantity	Total Cost
Full Depth Pavement - Bikeway (Including Excavation)	$60.00 /SY	213 SY	$12,800.00
Loam Borrow & Seed	$8.00 /SY	90 SY	$720.00
Signing, Striping & Pavement Markings	$1,400.00 /LS	1 LS	$1,400.00
Clearing and Grubbing	$5.00 /SY	1,011 SY	$5,055.56
Erosion Control Barrier	$7.50 /FT	700 FT	$5,250.00
Additional Earthwork (25% of total length)	$35.00 /CY	194 CY	$6,805.56
Boardwalk	$1,000.00 /FT	190 FT	$190,000.00
		SUBTOTAL:	$222,031.11
		Mobilization @ 3%	$6,660.93
		Contingency (40%)	$88,812.44
		MassDOT Construction Contingency (25%)	$55,507.78
		Construction Total	$373,012.27
		SAY:	$380,000.00

* Prices Based on Weighted Average Bid Prices (August 2016)

1 Cedar Street
Suite 400
Providence
Rhode Island 02903
401-272-8100

Upper Charles River Trail - Phase III
Alignment 1/Segment 13 (550 LF+/-)
Hopkinton, Massachusetts
September 30, 2016

Segment Length (ft)	550
Impact Width (ft)	20
Proposed Section (1-4)	1
Proposed Grade of Section (%)	3

Description	Unit Price	Quantity	Total Cost
Full Depth Pavement - Bikeway (Including Excavation)	$60.00 /SY	733 SY	$44,000.00
Loam Borrow & Seed	$8.00 /SY	90 SY	$720.00
Signing, Striping & Pavement Markings	$2,200.00 /LS	1 LS	$2,200.00
Clearing and Grubbing	$5.00 /SY	1,222 SY	$6,111.11
Erosion Control Barrier	$7.50 /FT	1,100 FT	$8,250.00
Additional Earthwork (25% of total length)	$35.00 /CY	306 CY	$10,694.44
		SUBTOTAL:	$71,975.56
		Mobilization @ 3%	$2,159.27
		Contingency (40%)	$28,790.22
		MassDOT Construction Contingency (25%)	$17,993.89
		Construction Total	$120,918.93
		SAY:	$130,000.00

* Prices Based on Weighted Average Bid Prices (August 2016)

1 Cedar Street
Suite 400
Providence
Rhode Island 02903
401-272-8100

Upper Charles River Trail Phase III
Hopkinton, Massachusetts
October 7, 2016

Total Estimated Construction Cost - Alignment 2		Total Cost
Segment 1	100 LF	$24,094.93
Segment 2	250 LF	$58,422.93
Segment 3	400 LF	$89,017.60
Segment 4	620 LF	$249,718.93
Segment 5	250 LF	$60,289.60
Segment 6	150 LF	$48,571.04
Segment 7	50 LF	$13,025.60
Segment 8	300 LF	$92,572.48
Segment 9	200 LF	$47,726.93
Segment 10	250 LF	$59,356.27
Segment 11	600 LF	$135,161.60
Segment 12	100 LF	$25,214.93
Segment 13	350 LF	$371,052.27
Segment 14	500 LF	$110,036.27
	4120 LF	
	SUBTOTAL:	$1,384,261.39
	Mobilization @ 3%	$41,527.84
	Contingency (40%)	$553,704.55
	MassDOT Construction Contingency (25%)	$346,065.35
		$2,325,559.13
	SAY:	$2,330,000.00

*Estimate is for comparison puposes only. Estimate does not include costs of design, permitting, ROW acquisition, utility work, lighting improvements.

1 Cedar Street
Suite 400
Providence
Rhode Island 02903
401-272-8100

Upper Charles River Trail - Phase III
Alignment 2/Segment 1 (100 LF+/-)
Hopkinton, Massachusetts
September 30, 2016

Segment Length (ft)	100
Impact Width (ft)	32
Proposed Section (1-4)	2
Proposed Grade of Section (%)	8

Description	Unit Price	Quantity	Total Cost
Full Depth Pavement - Bikeway (Including Excavation)	$60.00 /SY	133 SY	$8,000.00
Loam Borrow & Seed	$8.00 /SY	90 SY	$720.00
Signing, Striping & Pavement Markings	$400.00 /LS	1 LS	$400.00
Clearing and Grubbing	$5.00 /SY	356 SY	$1,777.78
Erosion Control Barrier	$7.50 /FT	200 FT	$1,500.00
Additional Earthwork (25% of total length)	$35.00 /CY	56 CY	$1,944.44
		SUBTOTAL:	$14,342.22
		Mobilization @ 3%	$430.27
		Contingency (40%)	$5,736.89
		MassDOT Construction Contingency (25%)	$3,585.56
		Construction Total	$24,094.93
		SAY:	$30,000.00

* Prices Based on Weighted Average Bid Prices (August 2016)

1 Cedar Street
Suite 400
Providence
Rhode Island 02903
401-272-8100

Upper Charles River Trail - Phase III
Alignment 2/Segment 2 (250 LF+/-)
Hopkinton, Massachusetts
September 30, 2016

Segment Length (ft)	250
Impact Width (ft)	32
Proposed Section(s) (1-4)	2/3
Proposed Grade of Section (%)	8

Description	Unit Price	Quantity	Total Cost
Full Depth Pavement - Bikeway (Including Excavation)	$60.00 /SY	333 SY	$20,000.00
Loam Borrow & Seed	$8.00 /SY	90 SY	$720.00
Signing, Striping & Pavement Markings	$1,000.00 /LS	1 LS	$1,000.00
Clearing and Grubbing	$5.00 /SY	889 SY	$4,444.44
Erosion Control Barrier	$7.50 /FT	500 FT	$3,750.00
Additional Earthwork (25% of total length)	$35.00 /CY	139 CY	$4,861.11
		SUBTOTAL:	$34,775.56
		Mobilization @ 3%	$1,043.27
		Contingency (40%)	$13,910.22
		MassDOT Construction Contingency (25%)	$8,693.89
		Construction Total	$58,422.93
		SAY:	$60,000.00

* Prices Based on Weighted Average Bid Prices (August 2016)

1 Cedar Street
Suite 400
Providence
Rhode Island 02903
401-272-8100

Upper Charles River Trail - Phase III
Alignment 2/Segment 3 (400 LF+/-)
Hopkinton, Massachusetts
September 30, 2016

Segment Length (ft)	400
Impact Width (ft)	22
Proposed Section(s) (1-4)	3
Proposed Grade of Section (%)	5

Description	Unit Price	Quantity	Total Cost
Full Depth Pavement - Bikeway (Including Excavation)	$60.00 /SY	533 SY	$32,000.00
Loam Borrow & Seed	$8.00 /SY	90 SY	$720.00
Signing, Striping & Pavement Markings	$1,600.00 /LS	1 LS	$1,600.00
Clearing and Grubbing	$5.00 /SY	978 SY	$4,888.89
Erosion Control Barrier	$7.50 /FT	800 FT	$6,000.00
Additional Earthwork (25% of total length)	$35.00 /CY	222 CY	$7,777.78
		SUBTOTAL:	$52,986.67
		Mobilization @ 3%	$1,589.60
		Contingency (40%)	$21,194.67
		MassDOT Construction Contingency (25%)	$13,246.67
		Construction Total	$89,017.60
		SAY:	$90,000.00

* Prices Based on Weighted Average Bid Prices (August 2016)

1 Cedar Street
Suite 400
Providence
Rhode Island 02903
401-272-8100

Upper Charles River Trail - Phase III
Alignment 2/Segment 4 (620 LF+/-)
Hopkinton, Massachusetts
September 30, 2016

Segment Length (ft)	620
Impact Width (ft)	42
Proposed Section (1-4)	4
Proposed Grade of Section (%)	10

Description	Unit Price	Quantity	Total Cost
Full Depth Pavement - Bikeway (Including Excavation)	$60.00 /SY	827 SY	$49,600.00
Loam Borrow & Seed	$8.00 /SY	90 SY	$720.00
Signing, Striping & Pavement Markings	$2,500.00 /LS	1 LS	$2,500.00
Clearing and Grubbing	$5.00 /SY	2,893 SY	$14,466.67
Erosion Control Barrier	$7.50 /FT	1,240 FT	$9,300.00
Additional Earthwork (25% of total length)	$35.00 /CY	344 CY	$12,055.56
Boardwalk	$1,000.00 /FT	60 FT	$60,000.00
		SUBTOTAL:	$148,642.22
		Mobilization @ 3%	$4,459.27
		Contingency (40%)	$59,456.89
		MassDOT Construction Contingency (25%)	$37,160.56
		Construction Total	$249,718.93
		SAY:	$250,000.00

* Prices Based on Weighted Average Bid Prices (August 2016)

1 Cedar Street
Suite 400
Providence
Rhode Island 02903
401-272-8100

Upper Charles River Trail - Phase III
Alignment 2/Segment 5 (250 LF+/-)
Hopkinton, Massachusetts
September 30, 2016

Segment Length (ft)	250
Impact Width (ft)	40
Proposed Section (1-4)	2
Proposed Grade of Section (%)	5

Description	Unit Price	Quantity	Total Cost
Full Depth Pavement - Bikeway (Including Excavation)	$60.00 /SY	333 SY	$20,000.00
Loam Borrow & Seed	$8.00 /SY	90 SY	$720.00
Signing, Striping & Pavement Markings	$1,000.00 /LS	1 LS	$1,000.00
Clearing and Grubbing	$5.00 /SY	1,111 SY	$5,555.56
Erosion Control Barrier	$7.50 /FT	500 FT	$3,750.00
Additional Earthwork (25% of total length)	$35.00 /CY	139 CY	$4,861.11
		SUBTOTAL:	$35,886.67
		Mobilization @ 3%	$1,076.60
		Contingency (40%)	$14,354.67
		MassDOT Construction Contingency (25%)	$8,971.67
		Construction Total	$60,289.60
		SAY:	$70,000.00

* Prices Based on Weighted Average Bid Prices (August 2016)

1 Cedar Street
Suite 400
Providence
Rhode Island 02903
401-272-8100

Upper Charles River Trail - Phase III
Alignment 2/Segment 6 (150 LF+/-)
Hopkinton, Massachusetts
September 30, 2016

Segment Length (ft)	150
Impact Width (ft)	40
Proposed Section (1-4)	4/3
Proposed Grade of Section (%)	7

Description	Unit Price	Quantity	Total Cost
Full Depth Pavement - Bikeway (Including Excavation)	$60.00 /SY	200 SY	$12,000.00
Loam Borrow & Seed	$8.00 /SY	90 SY	$720.00
Signing, Striping & Pavement Markings	$600.00 /LS	1 LS	$600.00
Clearing and Grubbing	$5.00 /SY	667 SY	$3,333.33
Erosion Control Barrier	$7.50 /FT	300 FT	$2,250.00
Class A Rock Excavation "Rock Cut" 24"depth	$66.72 /CY	150 LF	$10,008.00
		SUBTOTAL:	$28,911.33
		Mobilization @ 3%	$867.34
		Contingency (40%)	$11,564.53
		MassDOT Construction Contingency (25%)	$7,227.83
		Construction Total	$48,571.04
		SAY:	$50,000.00

* Prices Based on Weighted Average Bid Prices (August 2016)

1 Cedar Street
Suite 400
Providence
Rhode Island 02903
401-272-8100

Upper Charles River Trail - Phase III
Alignment 2/Segment 7 (250 LF+/-)
Hopkinton, Massachusetts
September 30, 2016

Segment Length (ft)	50
Impact Width (ft)	40
Proposed Section (1-4)	3
Proposed Grade of Section (%)	8

Description	Unit Price	Quantity	Total Cost
Full Depth Pavement - Bikeway (Including Excavation)	$60.00 /SY	67 SY	$4,000.00
Loam Borrow & Seed	$8.00 /SY	90 SY	$720.00
Signing, Striping & Pavement Markings	$200.00 /LS	1 LS	$200.00
Clearing and Grubbing	$5.00 /SY	222 SY	$1,111.11
Erosion Control Barrier	$7.50 /FT	100 FT	$750.00
Additional Earthwork (25% of total length)	$35.00 /CY	28 CY	$972.22
		SUBTOTAL:	$7,753.33
		Mobilization @ 3%	$232.60
		Contingency (40%)	$3,101.33
		MassDOT Construction Contingency (25%)	$1,938.33
		Construction Total	$13,025.60
		SAY:	$20,000.00

* Prices Based on Weighted Average Bid Prices (August 2016)

1 Cedar Street
Suite 400
Providence
Rhode Island 02903
401-272-8100

Upper Charles River Trail - Phase III
Alignment 2/Segment 8 (300 LF+/-)
Hopkinton, Massachusetts
September 30, 2016

Segment Length (ft)	300
Impact Width (ft)	28
Proposed Section (1-4)	3
Proposed Grade of Section (%)	8

Description	Unit Price	Quantity	Total Cost
Full Depth Pavement - Bikeway (Including Excavation)	$60.00 /SY	400 SY	$24,000.00
Loam Borrow & Seed	$8.00 /SY	90 SY	$720.00
Signing, Striping & Pavement Markings	$1,200.00 /LS	1 LS	$1,200.00
Clearing and Grubbing	$5.00 /SY	933 SY	$4,666.67
Erosion Control Barrier	$7.50 /FT	600 FT	$4,500.00
Class A Rock Excavation "Rock Cut" 24"depth	$66.72 /CY	300 LF	$20,016.00
		SUBTOTAL:	$55,102.67
		Mobilization @ 3%	$1,653.08
		Contingency (40%)	$22,041.07
		MassDOT Construction Contingency (25%)	$13,775.67
		Construction Total	$92,572.48
		SAY:	$100,000.00

* Prices Based on Weighted Average Bid Prices (August 2016)

1 Cedar Street
Suite 400
Providence
Rhode Island 02903
401-272-8100

Upper Charles River Trail - Phase III
Alignment 2/Segment 9 (950 LF+/-)
Hopkinton, Massachusetts
September 30, 2016

Segment Length (ft)	200
Impact Width (ft)	36
Proposed Section (1-4)	2/3
Proposed Grade of Section (%)	5

Description	Unit Price	Quantity	Total Cost
Full Depth Pavement - Bikeway (Including Excavation)	$60.00 /SY	267 SY	$16,000.00
Loam Borrow & Seed	$8.00 /SY	90 SY	$720.00
Signing, Striping & Pavement Markings	$800.00 /LS	1 LS	$800.00
Clearing and Grubbing	$5.00 /SY	800 SY	$4,000.00
Erosion Control Barrier	$7.50 /FT	400 FT	$3,000.00
Additional Earthwork (25% of total length)	$35.00 /CY	111 CY	$3,888.89
		SUBTOTAL:	$28,408.89
		Mobilization @ 3%	$852.27
		Contingency (40%)	$11,363.56
		MassDOT Construction Contingency (25%)	$7,102.22
		Construction Total	$47,726.93
		SAY:	$50,000.00

* Prices Based on Weighted Average Bid Prices (August 2016)

1 Cedar Street
Suite 400
Providence
Rhode Island 02903
401-272-8100

Upper Charles River Trail - Phase III
Alignment 2/Segment 10 (250 LF+/-)
Hopkinton, Massachusetts
September 30, 2016

Segment Length (ft)	250
Impact Width (ft)	36
Proposed Section (1-4)	2/3
Proposed Grade of Section (%)	5

Description	Unit Price	Quantity	Total Cost
Full Depth Pavement - Bikeway (Including Excavation)	$60.00 /SY	333 SY	$20,000.00
Loam Borrow & Seed	$8.00 /SY	90 SY	$720.00
Signing, Striping & Pavement Markings	$1,000.00 /LS	1 LS	$1,000.00
Clearing and Grubbing	$5.00 /SY	1,000 SY	$5,000.00
Erosion Control Barrier	$7.50 /FT	500 FT	$3,750.00
Additional Earthwork (25% of total length)	$35.00 /CY	139 CY	$4,861.11
		SUBTOTAL:	$35,331.11
		Mobilization @ 3%	$1,059.93
		Contingency (40%)	$14,132.44
		MassDOT Construction Contingency (25%)	$8,832.78
		Construction Total	$59,356.27
		SAY:	$60,000.00

* Prices Based on Weighted Average Bid Prices (August 2016)

1 Cedar Street
Suite 400
Providence
Rhode Island 02903
401-272-8100

Upper Charles River Trail - Phase III
Alignment 2/Segment 11 (600 LF+/-)
Hopkinton, Massachusetts
September 30, 2016

Segment Length (ft)	600
Impact Width (ft)	26
Proposed Section (1-4)	3
Proposed Grade of Section (%)	2

Description	Unit Price	Quantity	Total Cost
Full Depth Pavement - Bikeway (Including Excavation)	$60.00 /SY	800 SY	$48,000.00
Loam Borrow & Seed	$8.00 /SY	90 SY	$720.00
Signing, Striping & Pavement Markings	$2,400.00 /LS	1 LS	$2,400.00
Clearing and Grubbing	$5.00 /SY	1,733 SY	$8,666.67
Erosion Control Barrier	$7.50 /FT	1,200 FT	$9,000.00
Additional Earthwork (25% of total length)	$35.00 /CY	333 CY	$11,666.67
		SUBTOTAL:	$80,453.33
		Mobilization @ 3%	$2,413.60
		Contingency (40%)	$32,181.33
		MassDOT Construction Contingency (25%)	$20,113.33
		Construction Total	$135,161.60
		SAY:	$140,000.00

* Prices Based on Weighted Average Bid Prices (August 2016)

1 Cedar Street
Suite 400
Providence
Rhode Island 02903
401-272-8100

Upper Charles River Trail - Phase III
Alignment 2/Segment 12 (100 LF+/-)
Hopkinton, Massachusetts
September 30, 2016

Segment Length (ft)	100
Impact Width (ft)	44
Proposed Section (1-4)	2/3
Proposed Grade of Section (%)	8

Description	Unit Price	Quantity	Total Cost
Full Depth Pavement - Bikeway (Including Excavation)	$60.00 /SY	133 SY	$8,000.00
Loam Borrow & Seed	$8.00 /SY	90 SY	$720.00
Signing, Striping & Pavement Markings	$400.00 /LS	1 LS	$400.00
Clearing and Grubbing	$5.00 /SY	489 SY	$2,444.44
Erosion Control Barrier	$7.50 /FT	200 FT	$1,500.00
Additional Earthwork (25% of total length)	$35.00 /CY	56 CY	$1,944.44
		SUBTOTAL:	$15,008.89
		Mobilization @ 3%	$450.27
		Contingency (40%)	$6,003.56
		MassDOT Construction Contingency (25%)	$3,752.22
		Construction Total	$25,214.93
		SAY:	$30,000.00

* Prices Based on Weighted Average Bid Prices (August 2016)

1 Cedar Street
Suite 400
Providence
Rhode Island 02903
401-272-8100

Upper Charles River Trail - Phase III
Alignment 2/Segment 13 (350 LF+/-)
Hopkinton, Massachusetts
September 30, 2016

Segment Length (ft)	350
Impact Width (ft)	20
Proposed Section (1-4)	3
Proposed Grade of Section (%)	2

Description	Unit Price	Quantity	Total Cost
Full Depth Pavement - Bikeway (Including Excavation)	$60.00 /SY	213 SY	$12,800.00
Loam Borrow & Seed	$8.00 /SY	90 SY	$720.00
Signing, Striping & Pavement Markings	$1,400.00 /LS	1 LS	$1,400.00
Clearing and Grubbing	$5.00 /SY	778 SY	$3,888.89
Erosion Control Barrier	$7.50 /FT	700 FT	$5,250.00
Additional Earthwork (25% of total length)	$35.00 /CY	194 CY	$6,805.56
Boardwalk	$1,000.00 /FT	190 FT	$190,000.00
		SUBTOTAL:	$220,864.44
		Mobilization @ 3%	$6,625.93
		Contingency (40%)	$88,345.78
		MassDOT Construction Contingency (25%)	$55,216.11
		Construction Total	$371,052.27
		SAY:	$380,000.00

* Prices Based on Weighted Average Bid Prices (August 2016)

1 Cedar Street
Suite 400
Providence
Rhode Island 02903
401-272-8100

Upper Charles River Trail - Phase III
Alignment 2/Segment 14 (500 LF+/-)
Hopkinton, Massachusetts
September 30, 2016

Segment Length (ft)	500
Impact Width (ft)	20
Proposed Section (1-4)	1
Proposed Grade of Section (%)	3

Description	Unit Price	Quantity	Total Cost
Full Depth Pavement - Bikeway (Including Excavation)	$60.00 /SY	667 SY	$40,000.00
Loam Borrow & Seed	$8.00 /SY	90 SY	$720.00
Signing, Striping & Pavement Markings	$2,000.00 /LS	1 LS	$2,000.00
Clearing and Grubbing	$5.00 /SY	1,111 SY	$5,555.56
Erosion Control Barrier	$7.50 /FT	1,000 FT	$7,500.00
Additional Earthwork (25% of total length)	$35.00 /CY	278 CY	$9,722.22
		SUBTOTAL:	$65,497.78
		Mobilization @ 3%	$1,964.93
		Contingency (40%)	$26,199.11
		MassDOT Construction Contingency (25%)	$16,374.44
		Construction Total	$110,036.27
		SAY:	$120,000.00

* Prices Based on Weighted Average Bid Prices (August 2016)

ALTERNATIVE 1

Segment	EXISTING							PROPOSED											
	STA	to	STA	Length	Elev.	to	Elev.	Existing Grade	STA	to	STA	Length	Elev.	to	Elev.	Proposed Grade	Proposed Section	Max. cut/fill "H" (ft)	Impact Width (ft)	Impact Area (sf)	Notes
1	0		100	100	460		470	10%	0		100	100	460		468	8%	2	-2	32	3200	reduce elevation at top to 468. start segment 2 at elevation 468
2	100		400	300	470		435	12%	100		400	300	468		437	10%	3/4	-2/+2	44	13200	cut 2' /fill 2' with rest intervals every 30' (use greater of cut=32' +12' = 44' wide /fill=20'+12' = 32' wide)
3	400		800	400	435		425	3%	400		800	400	437		425	3%	3	+2	20	8000	60 LF of boardwalk
4	800		1150	350	425		410	4%	800		1150	350	425		410	4%	1	0	20	7000	
5	1150		1250	100	410		410	0%	1150		1250	100	410		410	0%	1	0	20	2000	
6	1250		1400	150	410		415	3%	1250		1400	150	410		415	3%	2	2	32	4800	Rock cut
7	1400		1650	250	415		405	4%	1400		1650	250	415		405	4%	1	0	20	5000	Proposed MSE slope, fill and culvert
8	1650		2000	350	405		390	4%	1650		2000	350	405		390	4%	2	2	32	11200	Rock cut
9	2000		2950	950	390		295	10%	2000		2950	1150	390		295	8%	4	0	30	34500	SWITCHBACK to 8.3% with landings evey 200 feet requires an extra 200LF of path
10	2950		3150	200	295		300	3%	2950		3150	200	295		300	3%	1	0	20	4000	
11	3150		3250	100	300		285	15%	3150		3250	100	300		290	10%	3	5	38	3800	would require 3 rest intervals (see section 4) so 26'+12' = 38'wide
12	3250		3600	350	285		280	1%	3250		3600	350	290		280	3%	3	5	26	9100	fill 5' to 0' for 160 LF, boardwalk for 190 LF
13	3600		4150	550	280		295	3%	3600		4150	550	280		295	3%	1	0	20	11000	100 LF section 1, 150 LF of boardwalk
Total Length of Alignment 1				**4150**								**4350**								**116800**	

ALTERNATIVE 2

Segment	EXISTING							PROPOSED											
	STA	to	STA	Length	Elev.	to	Elev.	Existing Grade	STA	to	STA	Length	Elev.	to	Elev.	Proposed Grade	Proposed Section	Max. cut/fill "H" (ft)	Impact Width (ft)	Impact Area (sf)	Notes
1	0		100	100	460		470	10%	0		100	100	460		468	8%	2	-2	32	3200	reduce elevation at top to 468. start segment 2 at elevation 468
2	100		300	200	470		445	13%	100		350	250	468		448	8%	2/3	-2/+3	32	8000	cut 2' /fill 3' (use greater of cut=32'wide /fill=22'wide)
3	300		750	450	445		430	3%	350		750	400	448		430	5%	3	+3	22	8800	
4	750		1000	250	430		380	20%	750		1000	620	430		377	9%	4	-3	42	26040	SWITCHBACK 10% with landings evey 30 feet would require a total of 620LF
5	1000		1200	200	380		380	0%	1000		1250	250	377		365	5%	2	-15	40	10000	use rock cut slope .5/1
6	1200		1300	100	380		350	30%	1250		1400	150	365		354	7%	4/3	-15	40	6000	cut 15' /fill 4' use rock cut slope .5/1 (use greater of cut=39'wide /fill=40'wide)
7	1300		1450	150	350		350	0%	1400		1450	50	354		350	8%	3	+4	40	2000	Proposed MSE slope, fill and culvert
8	1450		1750	300	350		320	10%	1450		1750	300	350		326	8%	3	+6	28	8400	
9	1750		1950	200	320		320	0%	1750		1950	200	326		317	5%	2/3	+6/-3	36	7200	Fill 6'/cut 3' (use greater of fill=28'wide/cut=36'wide)
10	1950		2200	250	320		300	8%	1950		2200	250	317		305	5%	2/3	-3/+5	36	9000	cut 3' /fill 5' (use greater of cut=36'wide /fill=26'wide)
11	2200		2800	600	300		295	1%	2200		2800	600	305		295	2%	3	+5	26	15600	modified for MSE slopes (400 LF) 200 LF of Boardwalk
12	2800		2900	100	300		285	15%	2800		2900	100	295		287	8%	2/3	-5/+2	44	4400	cut 5' /fill 2' (use greater of cut=44'wide /fill=20'wide)
13	2900		3250	350	285		280	1%	2900		3250	350	287		280	2%	3	+2	20	7000	modified for MSE slopes (100 LF) 150 LF of Boardwalk
14	3250		3750	500	280		295	3%	2900		3750	500	280		295	3%	1	0	20	10000	
Total Length of Alignment 2				**3750**								**4120**								125640	